Multi-purpose Intelligent Robot

FANUC Robot R-2000*i*C series

MOTION CONTROLS ROBOTICS
1500 Walter Ave, Fremont, OH 43420
Contact Sales
Call - 419-334-5886 or
email -sales@mcri-us.com
motioncontrolsrobotics.com
CERTIFIED SERVICING
CERTIFIED VISION SPECIALIST



The FANUC R-2000*i*C robot is a multi-purpose intelligent robot based on FANUC's years of experience and renowned technology. This high performance intelligent robot with outstanding reliability and cost performance will support your needs in a wide range of applications, such as spot welding, material handling and assembly.

- Size and weight reduction of the mechanical unit for a more lightweight and compact robot.
- A lightweight, rigid arm combined with the world's most advanced motion control technology offers significantly improved motion performance, and higher productivity.
- Extensive options are available for various processes, including the spot welding solution arm.
- The new R-30*i*B robot controller provides an energy regeneration option and a compact cabinet.
- Available with the most advanced intelligent features such as the Learning Robot, Bin Picking, Force Sensing, *i*RVision and Visual Line Tracking.

Application system

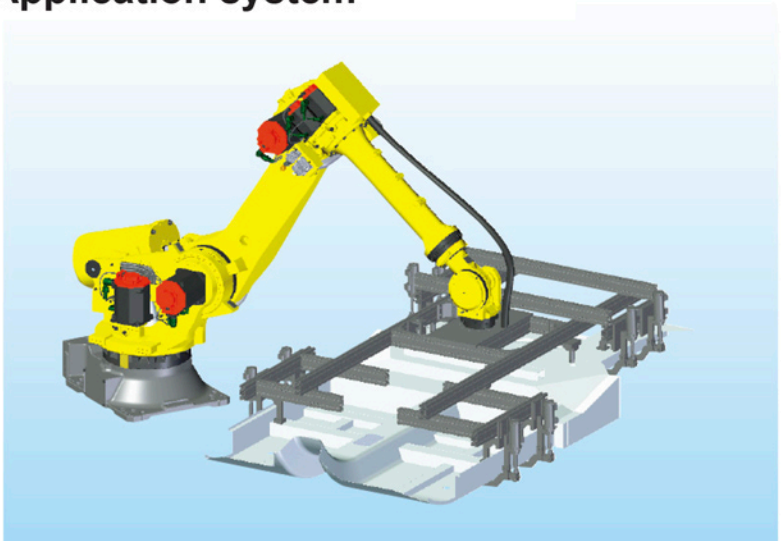

Large part handling

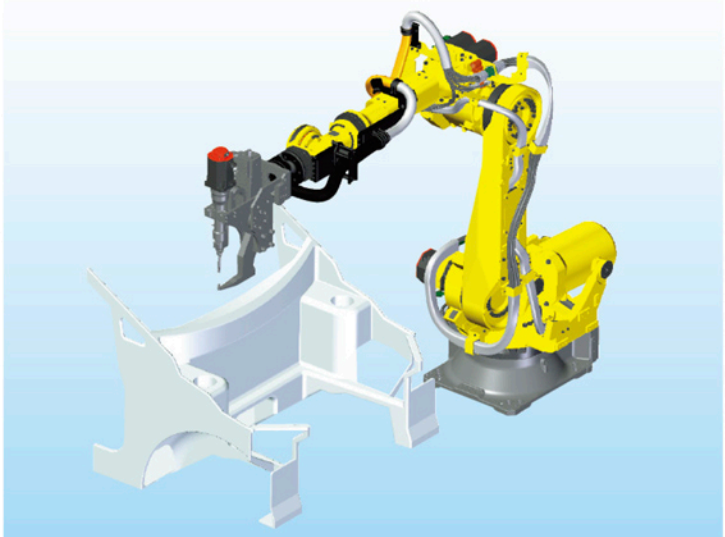

Spot welding

Operating space

R-2000*i*C/210F, 165F

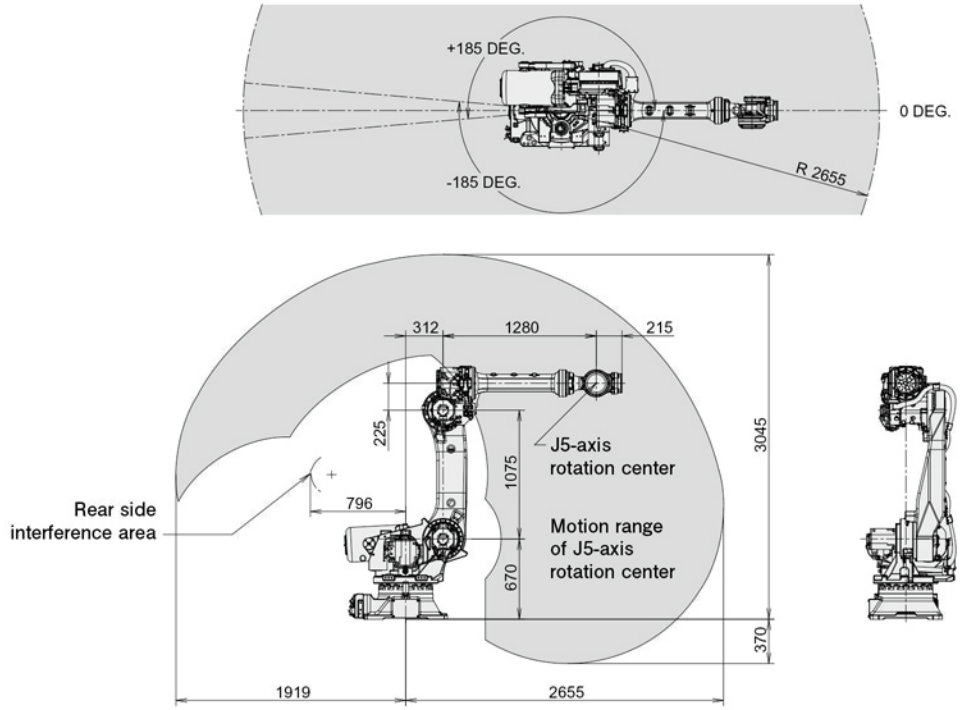

Specifications

Item		Specifications			
		R-2000*i*C/210F		R-2000*i*C/165F	
Type		Articulated Type			
Controlled axes		6 axes (J1, J2, J3, J4, J5, J6)			
Reach		2655 mm			
Installation		Floor			
Motion range (Maximum speed) Note 1)	J1 axis rotation	370°(120°/s)	6.46 rad (2.09 rad/s)	370°(130°/s)	6.46 rad (2.27 rad/s)
	J2 axis rotation	136°(105°/s)	2.37 rad (1.83 rad/s)	136°(115°/s)	2.37 rad (2.01 rad/s)
	J3 axis rotation	312°(110°/s)	5.45 rad (1.92 rad/s)	312°(125°/s)	5.45 rad (2.18 rad/s)
	J4 axis wrist rotation	720°(140°/s)	12.57 rad (2.44 rad/s)	720°(180°/s)	12.57 rad (3.14 rad/s)
	J5 axis wrist swing	250°(140°/s)	4.36 rad (2.44 rad/s)	250°(180°/s)	4.36 rad (3.14 rad/s)
	J6 axis wrist rotation	720°(220°/s)	12.57 rad (3.84 rad/s)	720°(260°/s)	12.57 rad (4.54 rad/s)
Max. load capacity at wrist		210 kg		165 kg	
Max. load capacity at J2 base		550 kg		550 kg	
Max. load capacity on J3 arm		25 kg (A)	(A) + (B) < 50 kg	25 kg (A)	(A) + (B) < 50 kg
Max. load capacity on J3 casing		50 kg (B)		50 kg (B)	
Allowable load moment at wrist	J4 axis	1360 N·m	139 kgf·m	940 N·m	96 kgf·m
	J5 axis	1360 N·m	139 kgf·m	940 N·m	96 kgf·m
	J6 axis	735 N·m	75 kgf·m	490 N·m	50 kgf·m
Allowable load inertia at wrist	J4 axis	147 kg·m²	1500 kgf·cm·s²	89 kg·m²	908 kgf·cm·s²
	J5 axis	147 kg·m²	1500 kgf·cm·s²	89 kg·m²	908 kgf·cm·s²
	J6 axis	82 kg·m²	837 kgf·cm·s²	46 kg·m²	469 kgf·cm·s²
Drive method		Electric servo drive by AC servo motor			
Repeatability		±0.2 mm			
Mass Note 2)		1090 kg		1090 kg	
Installation environment		Ambient temperature : 0～45°C Ambient humidity : Normally 75 %RH or less (No dew, nor frost allowed) Short term Max. 95 %RH or less (within one month) Vibration acceleration : 4.9 m/s² (0.5G) or less			

Note 1) In case of short distance motion, the axis speed may not reach the maximum value stated.
Note 2) Without controller.

Operating space

R-2000*i*C/125L

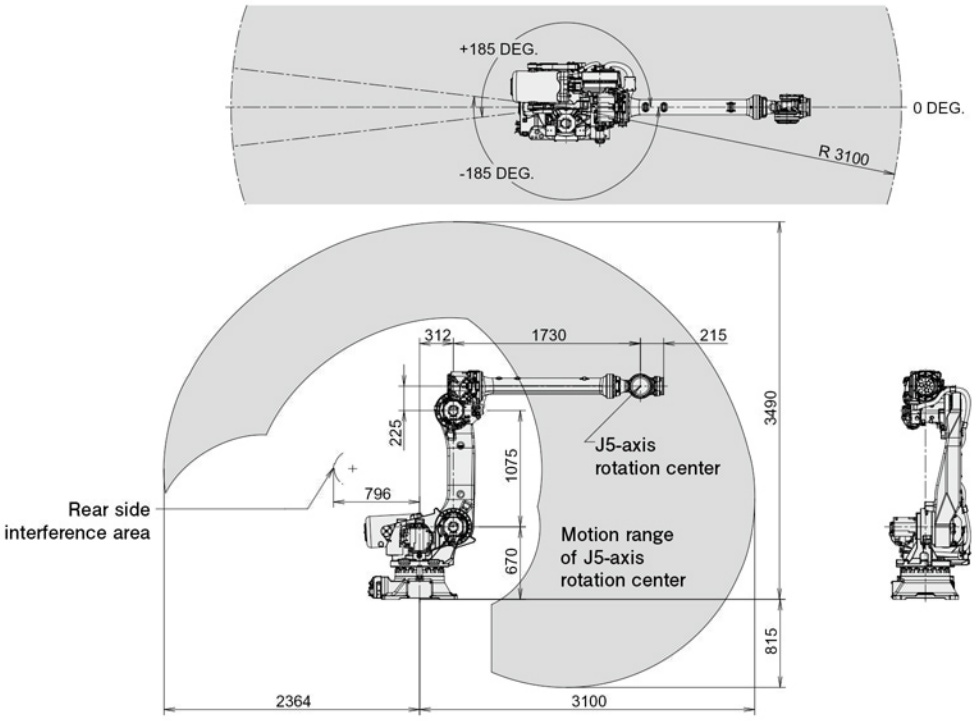

Specifications

Item		Specifications	
		R-2000*i*C/125L	
Type		Articulated Type	
Controlled axes		6 axes (J1, J2, J3, J4, J5, J6)	
Reach		3100 mm	
Installation		Floor	
Motion range (Maximum speed) Note 1)	J1 axis rotation	370°(130°/s)	6.46 rad (2.27 rad/s)
	J2 axis rotation	136°(115°/s)	2.37 rad (2.01 rad/s)
	J3 axis rotation	301°(125°/s)	5.25 rad (2.18 rad/s)
	J4 axis wrist rotation	720°(180°/s)	12.57 rad (3.14 rad/s)
	J5 axis wrist swing	250°(180°/s)	4.36 rad (3.14 rad/s)
	J6 axis wrist rotation	720°(260°/s)	12.57 rad (4.54 rad/s)
Max. load capacity at wrist		125 kg	
Max. load capacity at J2 base		550 kg	
Max. load capacity on J3 arm		25 kg (A)	(A) + (B) < 40 kg
Max. load capacity on J3 casing		40 kg (B)	
Allowable load moment at wrist	J4 axis	710 N·m	72 kgf·m
	J5 axis	710 N·m	72 kgf·m
	J6 axis	355 N·m	36 kgf·m
Allowable load inertia at wrist	J4 axis	72 kg·m²	735 kgf·cm·s²
	J5 axis	72 kg·m²	735 kgf·cm·s²
	J6 axis	40 kg·m²	408 kgf·cm·s²
Drive method		Electric servo drive by AC servo motor	
Repeatability		±0.2 mm	
Mass Note 2)		1115 kg	
Installation environment		Ambient temperature : 0~45°C Ambient humidity : Normally 75 %RH or less (No dew, nor frost allowed) Short term Max. 95 %RH or less (within one month) Vibration acceleration : 4.9 m/s² (0.5G) or less	

Note 1) In case of short distance motion, the axis speed may not reach the maximum value stated.
Note 2) Without controller.

MOTION CONTROLS ROBOTICS
1500 Walter Ave, Fremont, OH 43420
Contact Sales
Call - 419-334-5886 or
email -sales@mcri-us.com
motioncontrolsrobotics.com
CERTIFIED SERVICING
CERTIFIED VISION SPECIALIST

Operating space

R-2000*i*C/210R, 165R

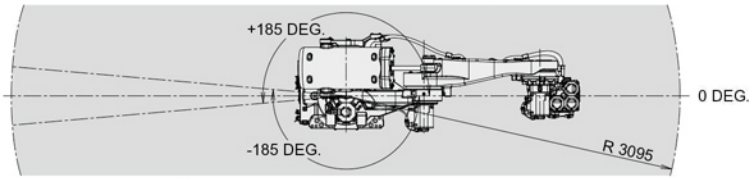

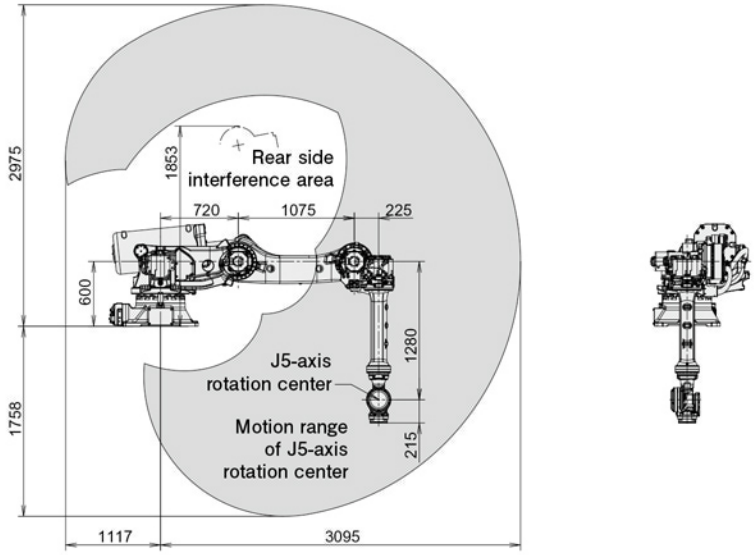

Specifications

Item		Specifications			
		R-2000*i*C/210R		R-2000*i*C/165R	
Type		Articulated Type			
Controlled axes		6 axes (J1, J2, J3, J4, J5, J6)			
Reach		3095 mm			
Installation		Rack mount			
Motion range (Maximum speed) Note 1)	J1 axis rotation	370°(105°/s)	6.46 rad (1.83 rad/s)	370°(115°/s)	6.46 rad (2.01 rad/s)
	J2 axis rotation	200°(100°/s)	3.49 rad (1.75 rad/s)	200°(110°/s)	3.49 rad (1.92 rad/s)
	J3 axis rotation	375°(110°/s)	6.54 rad (1.92 rad/s)	375°(125°/s)	6.54 rad (2.18 rad/s)
	J4 axis wrist rotation	720°(140°/s)	12.57 rad (2.44 rad/s)	720°(180°/s)	12.57 rad (3.14 rad/s)
	J5 axis wrist swing	250°(140°/s)	4.36 rad (2.44 rad/s)	250°(180°/s)	4.36 rad (3.14 rad/s)
	J6 axis wrist rotation	720°(220°/s)	12.57 rad (3.84 rad/s)	720°(260°/s)	12.57 rad (4.54 rad/s)
Max. load capacity at wrist		210 kg		165 kg	
Max. load capacity at J2 base		550 kg		550 kg	
Max. load capacity on J3 arm		30 kg (A)	(A)×4/3+(B) < 40 kg	25 kg (A)	(A) + (B) < 50 kg
Max. load capacity on J3 casing		40 kg (B)		50 kg (B)	
Allowable load moment at wrist	J4 axis	1360 N·m	139 kgf·m	940 N·m	96 kgf·m
	J5 axis	1360 N·m	139 kgf·m	940 N·m	96 kgf·m
	J6 axis	735 N·m	75 kgf·m	490 N·m	50 kgf·m
Allowable load inertia at wrist	J4 axis	147 kg·m²	1500 kgf·cm·s²	89 kg·m²	908 kgf·cm·s²
	J5 axis	147 kg·m²	1500 kgf·cm·s²	89 kg·m²	908 kgf·cm·s²
	J6 axis	82 kg·m²	837 kgf·cm·s²	46 kg·m²	469 kgf·cm·s²
Drive method		Electric servo drive by AC servo motor			
Repeatability		±0.2 mm			
Mass Note 2)		1370 kg		1370 kg	
Installation environment		Ambient temperature : 0~45°C Ambient humidity : Normally 75 %RH or less (No dew, nor frost allowed) Short term Max. 95 %RH or less (within one month) Vibration acceleration : 4.9 m/s² (0.5G) or less			

Note 1) In case of short distance motion, the axis speed may not reach the maximum value stated.
Note 2) Without controller.

FANUC

FANUC AMERICA CORPORATION
3900 WEST HAMLIN ROAD
ROCHESTER HILLS MI 48309-3253

MARKETING@FANUCAMERICA.COM FANUCAMERICA.COM 888-FANUC-US

© 2015 FANUC America Corporation. All Rights Reserved.

FANUC LITHO IN U.S.A. FRA - 2/26/2015